ISBN- 978-978-57388-7-2

Trinity University, Nigeria
Society for Multidisciplinary & Advanced Research Techniques (SMART) Africa
IEEE Computer Society, Nigeria
The ICT University Foundations, USA.

LASUSTECH Multidisciplinary Innovations Conference (LASUSTECH-MIC)

16th – 18th April, 2022

Identification of Weak Buses and Critical Lines for Consideration of Transmission Network Expansion Planning

[1] Ogundare, A.B., [1]Adebeshin A. I. & [2] Oludare, N.A.
[1]Electrical/ElectrOnics Engineering Department
[2]Electronics and Computer Engineering Departmen
Lagos State University of Science and Technology, Ikorodu, Lagos, Nigeria.

E-mail: ayoadebensonoludare@yahoo.com

Phone: +2348035061075

Proceedings Citation Format
Ogundare, A.B., Adebeshin A. I. & Oludare, N.A. (2022): Identification of Weak Buses and Critical Lines for Consideration of Transmission Network Expansion Planning . Proceedings of the LASUSTECH 30th iSTEAMS Multidisciplinary Innovations Conference. Lagos State University of Science & Technology, Ikorodu, Lagos State, Nigeria May 2022. Pp 217-232. www.isteams.net/lasustech2022
DOI: https://doi.org/10.22624/AIMS/iSTEAMS/LASUSTECH2022V30P19

ISBN- 978-978-57388-7-2

Identification of Weak Buses and Critical Lines for Consideration of Transmission Network Expansion Planning

[1] Ogundare, A.B., [1]Adebeshin A. I. & [2] Oludare, N.A.
[1]Electrical/Electr0nics Engineering Department
[2]Electronics and Computer Engineering Departmen
Lagos State University of Science and Technology, Ikorodu, Lagos, Nigeria.

ABSTRACT
Nigeria power system was privatised in 2005 to cope with ever increasing power demand. This consequently, attracted private investors and the Nigeria power system witnessed more generation. Notwithstanding, transmission network was not given equal attention by Transmission Company of Nigeria (TCN). This has led to stranded generation and overloading of the transmission network. Therefore, this article proposed transmission network expansion for Nigerian 28-bus 330 kV grid system using Neplan application software. Towards this end, power flow analysis was carried out using Newton-Ralphson iterative power flow technique. Voltage magnitude at the buses, current flowing on each transmission line and compare with the line flow limit. Ten buses had their voltage magnitude falling outside the statutory limit of 1± 0.05 per unit and seven transmission lines had their values exceeded the line flow limit. Static Var Compensator (SVC) was incorporated to each of those ten buses. The SVC supply negative var into the violated buses to supplement the positive reactive power of the lagging loads. This action made all the buses to have their values normalised and both active and reactive power flow improved but the seven overloaded lines still remained slightly overloaded. Parallel transmission lines were added to the seven overloaded lines with the SVC still in the circuit. The network then remained stable with no line overloaded and no violation of voltage magnitude in any bus.

Keyword: Electricity reform act, Overstressed, SVC, TEP, Steady State Stability.

1. INTRODUCTION

With attempts to cope with electricity demand by consumers, more power is being generated. But power system is made up of three major companies which are generation, transmission and distribution. Because the demand is enormous, bulk power has to be generated and transmitted. The bulk power cannot be handled by one company; hence the power generation is privatized. Private investors came in, with the purpose of making huge profit, to do business. Similarly, the distribution company was also deregulated so as to cope with numerous customers. But the transmission company is privatized and left in the hand of the federal government.

The transmission line is saddled with the responsibility to wheel the sum total generated power to the consumers. For power system to operate at steady state, the voltage magnitude voltage angle at each bus must be the statutory value. Likewise, the current flowing through the transmission should not exceed the line rating. Now that the transmission network is solely handled by the government, it cannot be able to carry all the power generated to the consumers without being overstressed. So due to this problem, the transmission line is long overdue for expansion.

ISBN- 978-978-57388-7-2

To carry out transmission network expansion, we need to operate the power system at the steady state condition to determine the voltage magnitude, voltage angle, current flow on each transmission line, active power loss and reactive power loss. Power is conveyed to the consumer's loads from generation to consumers by the product of current and voltage. Most loads are inductive in nature. In this wise, the loads consume reactive power and therefore, the voltage and current waveforms are out of phase by some angles. Reactive power refers to the power in the power system which does no useful work but needed to maintain the voltage to deliver the real power. As the load is increasing this angle is also increasing. As the load is increasing the reactive power of the load will also increase and this will cause voltage reduction in the buses connected to such loads. When the load is increasing, the current flowing would also increase and voltage will also leads to voltage drop. The buses that experience low voltage has to be compensated and likewise the transmission lines which have line rating exceeded must also be expanded.

In this paper, the Static Var Compensator (SVC) is used for voltage compensation and parallel transmission line is used for line rating compensation. This method concerns the analysis of the power system network to identify a topologically weak transmission lines. A topologically weak line, as defined by Alayande et. al. (2018), is one which cannot be loaded up to its full capability limit without yielding a lower power transfer capability (Alayande et al. 2019). This could be seen as the expansion of the network through the addition of new transmission lines without actually introducing any additional new substations into the existing network. Consequently, the capital cost associated with the reinforced network is substantially minimized. The overall aim of this procedure is to improve the integrity of the existing network and it could be referred to as Transmission Expansion Planning (TEP) (Alayande, Jimoh, and Yusuff, 2018). The buses with voltage magnitudes outside the statutory limit are the critical buses.

Many researchers had done lots of work on the use of SVC and have been documented in the open literature. SVC is a power electronic based device (Alok and Amar, 2012) that can generate negative var to compensate the positive var of the lagging load and thereby improve the voltage magnitude of the bus as well as minimize power losses. Guneet *et al.* (2012) carried out work on SVC placement by genetic algorithm. The author used Electrical Transient Analyzer Program (ETAP) software to carry out simulation. The use of SVC in this work increases the voltage magnitude of the buses and power flows on the line improved. Benzergua *et al.,* (2012) presented an approach to improve voltage magnitude using optimal placement of static var compensator in the Algerian distribution system. The results showed the impact the SVC has in transmission losses which help to improve the voltage profile of the system and reduce the system's active power losses.

Furthermore, Reddy (2013) worked on voltage collapse prediction and voltage stability enhancement using static var compensator in which the methods were applied on WSCC-9 bus and IEEE-14 bus systems. The results obtained were used to evaluate the reactive power compensation and better operation and planning. It was concluded that the voltage stability of the weak bus was enhanced after the placement of SVC.

ISBN- 978-978-57388-7-2

2. MODELING POWER FLOW WITH SVC

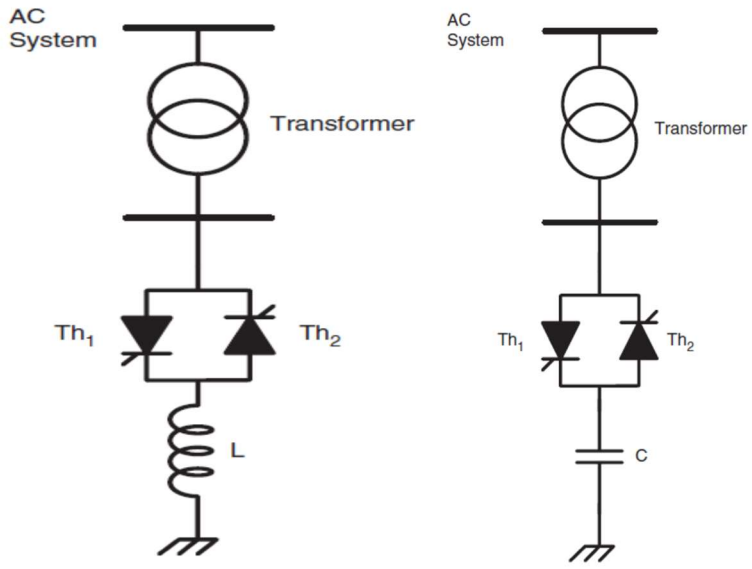

Figure 1: Schematic diagram of SVC (Saravana, 2015)

The equivalent susceptance B_{eq}, which neglects harmonic current, can be expressed as

$$B_{eq} = B_L(\propto) + B_C \quad (1)$$

Where;

$$B_L(\propto) = -\frac{1}{\omega L}\left(1 - \frac{2\propto}{\pi}\right) \quad (2)$$

$$B_C = \omega \times C \quad (3)$$

The reactive power provided by SVC in power flow framework can be expressed as

$$Q_{SVC} = -V_K^2 . B_{SVC} \quad (4)$$

The constraint on the reactive power at bus k is

$$B_{SVC}^{min} \leq B_{SVC} \leq B_{SVC}^{max} \quad (5)$$

ISBN- 978-978-57388-7-2

3. THE SAMPLE NETWORK

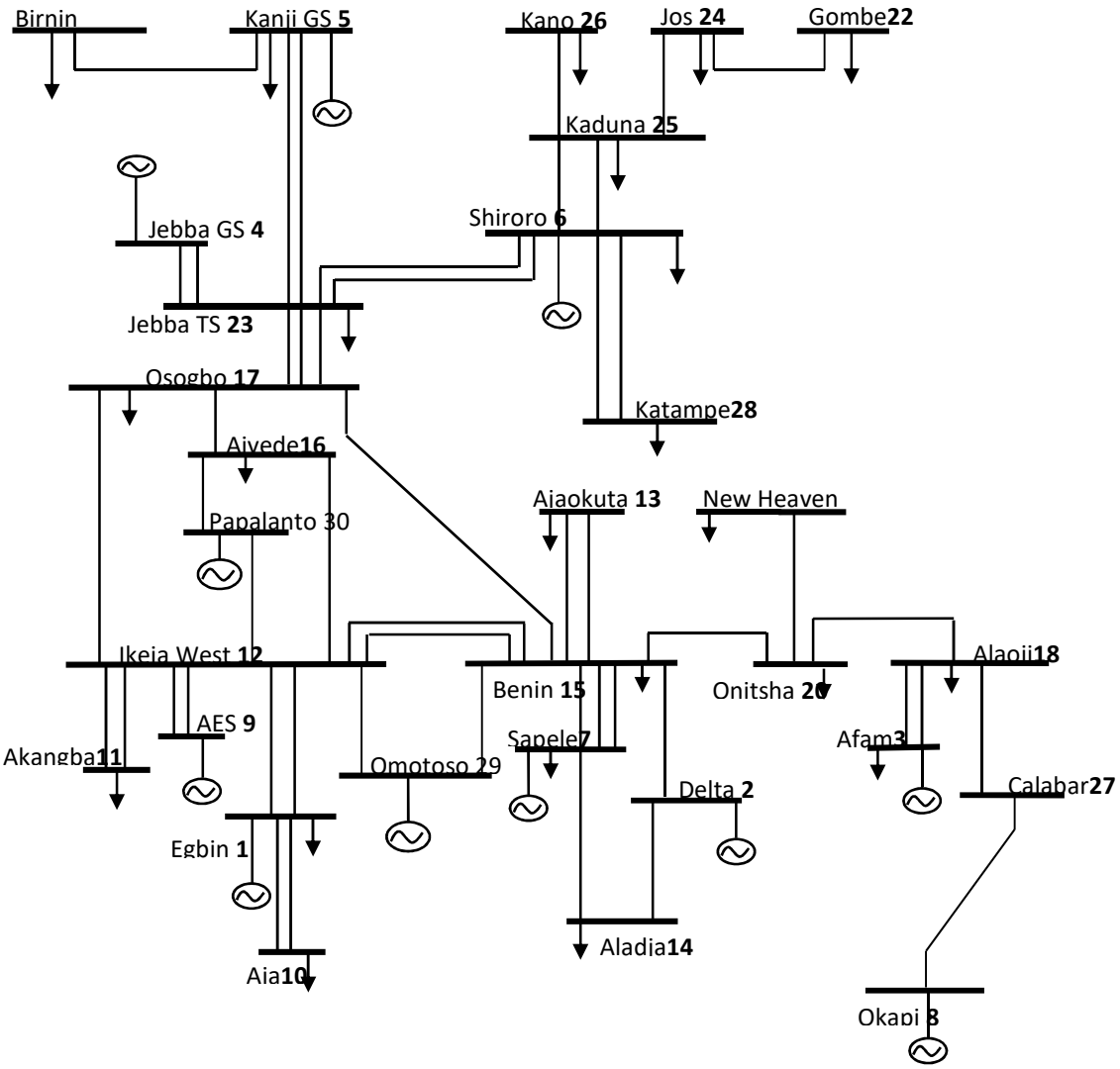

Figure 2: Nigerian 28-bus 330 kV Network System

4. RESULTS AND DISCUSSION

Table 1 shows the results of Newton-Ralphson power flow analysis. It shows that ten (10) out twenty-eight (28) buses experienced low voltage. Those buses are indicated in Table 2. Table 3 indicates the power flow and losses on each transmission line. The summary of active and reactive power losses are 536.55 MW and 781.68 MVAR respectively as indicated in Table 4. From the result of Table 3, seven transmission lines have high losses. The lines with high losses are collated as shown as Table 5. Low voltage and high losses are not acceptable as quality power supply.

ISBN- 978-978-57388-7-2

SVC was used as compensator for the low voltage buses. With the compensator, power flow was carried out. The power flow result is shown in Table 6. All the violated buses are no longer experience low voltage as shown in Table 7. The summary of line losses after compensation is contained in Table 8. The losses drop from 536.55 MW and 781.68 MVAR to 534.847 MW and 117.76 MVAR respectively. The power flow result of using SVC and addition of parallel transmission lines to each of the seven overloaded lines is shown in Table 9. From the result of Table 9, no bus is constrained and no transmission line is overloaded. The power loss was reduced significantly to 287.64 MW and -588.417 MVAR. Therefore, the transmission network becomes more efficient.

Table 1: Initial Power Flow Result

BUS NO	V %	Angle Degree	P Load MW	Q Load MVAR	P Gen MW	Q Gen MVAR
1	100	0	68.9	51.7	455.045	817.973
2	100	4.4	89	20	670	204.477
3	100	36.6	52.5	39.4	431	535.302
4	100	2.1	0	0	495	161.888
5	100	3.7	7	5.2	624.7	9.891
6	100	-9.4	70.3	36.1	388.9	755.4
7	100	-0.2	20.6	15.4	190.3	983.996
8	100	88.2	0	0	750	282.47
9	100	2.4	0	0	750	50.577
10	99.12	-0.7	274.4	205.8	0	0
11	92.24	-3.2	633.2	474.9	0	0
12	97.45	-0.1	13.8	10.3	0	0
13	96.05	-0.5	96.5	72.4	0	0
14	96.74	0.1	383.3	287.5	0	0
15	97.58	1.1	275.8	206.8	0	0
16	90.96	-4.6	201.2	150.9	0	0
17	96.05	-1.1	427	320.2	0	0

ISBN- 978-978-57388-7-2

BUS NO	V %	Angle Degree	P Load MW	Q Load MVAR	P Gen MW	Q Gen MVAR
18	98.28	36.9	177.9	133.4	0	0
19	61.29	2.2	184.6	138.4	0	0
20	69.15	8.9	114.5	85.9	0	0
21	91.07	-3.7	130.6	97.9	0	0
22	80.33	-25.9	11.3	8.2	0	0
23	99.89	1.9	70.3	52	0	0
24	79.39	-25	193	144.7	0	0
25	89.84	-15.7	220.6	142.9	0	0
26	68.7	-33.8	290.1	145	0	0
27	87	59.4	102	86.3	0	0
28	99.13	-9.9	110	89	0	0

Table 2: Violated Buses Without Compensation

Bus No	U %	P Load MW	Q Load MVAR	P Gen MW	Q Gen MVAR
11	92.24	633.2	474.9	0	0
16	90.96	201.2	150.9	0	0
19	61.29	184.6	138.4	0	0
20	69.15	114.5	85.9	0	0
21	91.07	130.6	97.9	0	0
22	80.33	11.3	8.2	0	0
24	79.39	193	144.7	0	0
25	89.84	220.6	142.9	0	0
26	68.7	290.1	145	0	0
27	87	102	86.3	0	0

ISBN- 978-978-57388-7-2

Table 3: Initial Line Flow and Losses

S/N	Node No	Element No	P MW	Q MVAR	P Loss MW	Q Loss MVAR	% Ploss
1	Bus 18	LINE 18-20	752.897	-25.454	287.615	218.938	38.2%
2	Bus 20	LINE 18-20	-465.281	244.392	287.615	218.938	61.8%
3	Bus 27	LINE 8-27	-698.359	69.597	51.6412	352.067	7.39%
4	Bus 8	LINE 8-27	750	282.47	51.6412	352.067	6.8%
5	Bus 18	LINE 18-27	-561.123	387.186	35.2359	231.288	6.27%
6	Bus 27	LINE 18-27	596.359	-155.897	35.2359	231.288	5.9%
7	Bus 15	LINE 15-20	-131.258	705.385	30.2265	207.452	23%
8	Bus 20	LINE 15-20	161.484	-497.933	30.2265	207.452	18.7%
9	Bus 25	LINE 25-26	307.653	253.576	17.5533	108.576	5.7%
10	Bus 26	LINE 25-26	-290.1	-145	17.5533	108.576	6.05%
11	Bus 12	LINE 9-12	-366.367	-17.674	8.6328	7.6141	2.35%
12	Bus 12	LINE 9-12 (2)	-366.367	-17.674	8.6328	7.6141	2.3%
13	Bus 9	LINE 9-12	375	25.289	8.6328	7.6141	2.35%
14	Bus 9	LINE 9-12 (2)	375	25.289	8.6328	7.6141	2.3%
15	Bus 25	LINE 6-25	-369.156	-261.371	8.3927	48.5868	2.27%
16	Bus 25	LINE 6-25 (2)	-369.156	-261.371	8.3927	48.5868	2.22%
17	Bus 6	LINE 6-25	377.548	309.957	8.3927	48.5868	2.27%
18	Bus 6	LINE 6-25 (2)	377.548	309.957	8.3927	48.5868	2.22%
19	Bus 15	LINE 7-15	-51.784	-268.933	7.401	-0.7814	14.29%
20	Bus 15	LINE 7-15 (2)	-51.784	-268.933	7.401	-0.7814	12.5%
21	Bus 15	LINE 7-15 (3)	-51.784	-268.933	7.401	-0.7814	14.29%
22	Bus 7	LINE 7-15	59.185	268.152	7.401	-0.7814	12.5%

ISBN- 978-978-57388-7-2

S/N	Node No	Element No	P MW	Q MVAR	P Loss MW	Q Loss MVAR	% Ploss
23	Bus 7	LINE 7-15 (2)	59.185	268.152	7.401	-0.7814	14.29%
24	Bus 7	LINE 7-15 (3)	59.185	268.152	7.401	-0.7814	12.5%
25	Bus 24	LINE 24-25	-204.336	-115.676	5.7222	10.5886	2.8%
26	Bus 25	LINE 24-25	210.058	126.265	5.7222	10.5886	2.7%
27	Bus 23	LINE 6-23	278.573	-33.685	5.2113	-11.522	1.8%
28	Bus 23	LINE 6-23 (2)	278.573	-33.685	5.2113	-11.522	1.9%
29	Bus 6	LINE 6-23	-273.362	22.163	5.2113	-11.522	1.8%
30	Bus 6	LINE 6-23 (2)	-273.362	22.163	5.2113	-11.522	1.9%
31	Bus 19	LINE 19-20	-184.6	-138.4	4.6973	29.2411	2.5%
32	Bus 20	LINE 19-20	189.297	167.641	4.6973	29.2411	2.48%
33	Bus 18	LINE 3-18	-184.837	-247.566	4.413	0.3853	2.39%
34	Bus 18	LINE 3-18 (2)	-184.837	-247.566	4.413	0.3853	2.39%
35	Bus 3	LINE 3-18	189.25	247.951	4.413	0.3853	2.33%
36	Bus 3	LINE 3-18 (2)	189.25	247.951	4.413	0.3853	2.33%
37	Bus 14	LINE 2-14	-391.843	-112.487	4.0419	16.8381	1.03%
38	Bus 2	LINE 2-14	395.885	129.325	4.0419	16.8381	1.02%
39	Bus 11	LINE 11-12	-316.6	-237.45	3.97	17.1741	1.25%
40	Bus 11	LINE 11-12(2)	-316.6	-237.45	3.97	17.1741	1.25%
41	Bus 12	LINE 11-12	320.57	254.624	3.97	17.1741	1.24%
42	Bus 12	LINE 11-12(2)	320.57	254.624	3.97	17.1741	1.24%
43	Bus 12	LINE 12-16	189.219	124.989	3.1134	-0.3639	1.65%
44	Bus 16	LINE 12-16	-186.105	-125.353	3.1134	-0.3639	1.67%
45	Bus 21	LINE 5-21	-130.6	-97.9	2.8151	-52.943	2.16%

ISBN- 978-978-57388-7-2

S/N	Node No	Element No	P MW	Q MVAR	P Loss MW	Q Loss MVAR	% Ploss
46	Bus 5	LINE 5-21	133.415	44.956	2.8151	-52.943	2.11%
47	Bus 15	LINE 2-15	-183.506	-45.338	1.6093	9.8143	0.88%
48	Bus 2	LINE 2-15	185.115	55.153	1.6093	9.8143	0.87%
49	Bus 17	LINE 17-23	-115.649	-80.409	1.036	-32.077	0.90%
50	Bus 17	LINE 17-23 (2)	-115.649	-80.409	1.036	-32.077	0.90%
51	Bus 17	LINE 17-23 (3)	-115.649	-80.409	1.036	-32.077	0.90%
52	Bus 23	LINE 17-23	116.685	48.332	1.036	-32.077	0.89%
53	Bus 23	LINE 17-23 (2)	116.685	48.332	1.036	-32.077	0.89%
54	Bus 23	LINE 17-23 (3)	116.685	48.332	1.036	-32.077	0.89%
55	Bus 1	LINE 1-12	55.843	285.361	0.9544	-0.0448	1.71%
56	Bus 1	LINE 1-12 (2)	55.843	285.361	0.9544	-0.0448	1.71%
57	Bus 12	LINE 1-12	-54.889	-285.406	0.9544	-0.0448	1.74%
58	Bus 12	LINE 1-12 (2)	-54.889	-285.406	0.9544	-0.0448	1.74%
59	Bus 23	LINE 5-23	-241.319	16.384	0.8239	-3.7493	0.34%
60	Bus 23	LINE 5-23 (2)	-241.319	16.384	0.8239	-3.7493	0.34%
61	Bus 5	LINE 5-23	242.142	-20.133	0.8239	-3.7493	0.34%
62	Bus 5	LINE 5-23 (2)	242.142	-20.133	0.8239	-3.7493	0.34%
63	Bus 14	LINE 7-14	8.543	-175.013	0.6873	-10.873	8.05%
64	Bus 7	LINE 7-14	-7.855	164.14	0.6873	-10.873	8.75%
65	Bus 15	LINE 15-17	50.892	-9.046	0.288	-44.033	0.57%
66	Bus 17	LINE 15-17	-50.604	-34.988	0.288	-44.033	0.57%
67	Bus 13	LINE 13-15 (2)	-48.25	-36.2	0.223	-34.234	0.48%
68	Bus 13	LINE 13-15	-48.25	-36.2	0.223	-34.234	0.48%

ISBN- 978-978-57388-7-2

S/N	Node No	Element No	P MW	Q MVAR	P Loss MW	Q Loss MVAR	% Ploss
69	Bus 15	LINE 13-15 (2)	48.473	1.966	0.223	-34.234	0.48%
70	Bus 15	LINE 13-15	48.473	1.966	0.223	-34.234	0.48%
71	Bus 12	LINE 12-17	44.707	10.357	0.1435	-33.511	0.32%
72	Bus 17	LINE 12-17	-44.563	-43.869	0.1435	-33.511	0.32%
73	Bus 28	LINE 6-28	-55	-44.5	0.1137	-16.969	0.21%
74	Bus 28	LINE 6-28 (2)	-55	-44.5	0.1137	-16.969	0.21%
75	Bus 6	LINE 6-28	55.114	27.53	0.1137	-16.969	0.21%
76	Bus 6	LINE 6-28 (2)	55.114	27.53	0.1137	-16.969	0.21%
77	Bus 23	LINE 4-23	-247.432	-81.196	0.0679	-0.2521	0.03%
78	Bus 23	LINE 4-23 (2)	-247.432	-81.196	0.0679	-0.2521	0.03%
79	Bus 4	LINE 4-23	247.5	80.944	0.0679	-0.2521	0.03%
73	Bus 28	LINE 6-28	-55	-44.5	0.1137	-16.969	0.21%
74	Bus 28	LINE 6-28 (2)	-55	-44.5	0.1137	-16.969	0.21%
75	Bus 6	LINE 6-28	55.114	27.53	0.1137	-16.969	0.21%
76	Bus 6	LINE 6-28 (2)	55.114	27.53	0.1137	-16.969	0.21%
77	Bus 23	LINE 4-23	-247.432	-81.196	0.0679	-0.2521	0.03%
78	Bus 23	LINE 4-23 (2)	-247.432	-81.196	0.0679	-0.2521	0.03%
79	Bus 4	LINE 4-23	247.5	80.944	0.0679	-0.2521	0.03%
73	Bus 28	LINE 6-28	-55	-44.5	0.1137	-16.969	0.21%
74	Bus 28	LINE 6-28 (2)	-55	-44.5	0.1137	-16.969	0.21%
75	Bus 6	LINE 6-28	55.114	27.53	0.1137	-16.969	0.21%
76	Bus 6	LINE 6-28 (2)	55.114	27.53	0.1137	-16.969	0.21%
91	Bus 16	LINE 16-17	-15.095	-25.547	0.0192	-25.663	0.13%
92	Bus 17	LINE 16-17	15.114	-0.116	0.0192	-25.663	0.13%

ISBN- 978-978-57388-7-2

Table 4: Summary of Initial Line Losses Without Compensation

	From Area/Zone	P Loss	Q Loss	P Imp	Q Imp	P Gen	Q Gen	P Load	Q Load
		MW	MVar	MW	MVar	MW	MVar	MW	MVar
1	Network	536.545	781.675	455.045	817.973	4754.945	3801.975	4218.4	3020.3
2	Area 1	536.545	781.675	0	0	4754.945	3801.975	4218.4	3020.3

Table 5: Overstressed Transmission Lines

S/N	Element No	P MW	Q MVAR	P Loss MW	Q Loss MVAR
1	LINE 8-27	750	282.47	51.6412	352.067
2	LINE 18-27	596.359	-155.897	35.2359	231.288
3	LINE 18-20	752.897	-25.454	287.615	218.938
4	LINE 25-26	307.653	253.576	17.5533	108.576
5	LINE 7-15	-51.784	-268.933	7.401	-0.7814
6	LINE 15-20	161.484	-497.933	30.2265	207.452
7	LINE 7-14	8.543	-175.013	10.457	87.3

ISBN- 978-978-57388-7-2

Table 6: Power Flow With SVC

Bus No	U %	P Load MW	Q Load MVAR	P Gen MW	Q Gen MVAR	Q Shunt MVAR
1	100	68.9	51.7	453.347	422.319	0
2	100	89	20	670	158.744	0
3	100	52.5	165.989	431	0	0
4	100	0	0	495	110.424	0
5	100	7	94.131	624.7	0	0
6	100	70.3	36.1	388.9	57.079	0
7	100	20.6	15.4	190.3	390.875	0
8	100	0	0	750	50.927	0
9	100	0	231.427	750	0	0
10	99.12	274.4	205.8	0	0	0
11	98.51	633.2	474.9	0	0	485.232
12	99.15	13.8	10.3	0	0	0
13	97.51	96.5	72.4	0	0	0
14	96.76	383.3	287.5	0	0	0
15	98.99	275.8	206.8	0	0	0
16	100	201.2	150.9	0	0	184.293
17	96.93	427	320.2	0	0	0
18	99.44	177.9	133.4	0	0	0
19	100	184.6	138.4	0	0	305.403
20	95.56	114.5	85.9	0	0	547.905
21	100	130.6	97.9	0	0	-79.705
22	100	11.3	8.2	0	0	19.841
23	99.91	70.3	52	0	0	0
24	100	193	144.7	0	0	-124.27
25	100	220.6	142.9	0	0	167.927
26	100	290.1	145	0	0	178.264
27	100	102	86.3	0	0	341.486
28	99.13	110	89	0	0	0

ISBN- 978-978-57388-7-2

Table 7: Violated Buses with SVC Compensation.

Bus No	U %	P Load MW	Q Load NVAR	P Gen MW	Q Gen MVAR	Q Shunt MVAR
11	98.51	633.2	474.9	0	0	-485.232
16	100	201.2	150.9	0	0	-184.293
19	100	184.6	138.4	0	0	-305.403
20	95.56	114.5	85.9	0	0	-547.905
21	100	130.6	97.9	0	0	-79.705
22	100	11.3	8.2	0	0	19.841
24	100	193	144.7	0	0	-124.27
25	100	220.6	142.9	0	0	-167.927
26	100	290.1	145	0	0	-178.264
27	100	102	86.3	0	0	-341.486

Table 8: Summary of Losses With Voltage Stability Improvement Using SVC

	From Area/Zone	P Loss	Q Loss	P Imp	Q Imp	P Gen	Q Gen	P Load	Q Load	Qc Shunt	Ql Shunt
		MW	MVar	MW	MVar	MW	MVar	MW	MVar	MVar	MVar
1	Network	534.847	117.766	453.347	422.319	4753.247	743.422	4218.4	3020.3	2414.486	19.841
2	Area 1	534.847	117.766	0	0	4753.247	743.422	4218.4	3020.3	2414.486	19.841
3	Zone 1	534.847	117.766	0	0	4753.247	743.422	4218.4	3020.3	2414.486	19.841

ISBN- 978-978-57388-7-2

Table 9: Power Flow With SVC and Additional Transmission Lines

Bus No	U %	U angle	P Load MW	Q Load MVAR	P Gen MW	Q Gen MVAR	Q Shunt MVAR
1	100	0	68.9	51.7	206.14	456.808	0
2	100	9.5	89	20	670	90.375	0
3	100	23.4	52.5	450.241	431	0	0
4	100	4.7	0	0	495	111.578	0
5	100	6.3	7	94.028	624.7	0	0
6	100	-6.2	70.3	36.1	388.9	56.021	0
7	100	5.5	20.6	15.4	190.3	434.977	0
8	100	44.9	0	54.623	750	0	0
9	100	3.4	0	229.691	750	0	0
10	99.12	-0.7	274.4	205.8	0	0	0
11	98.5	-2.8	633.2	474.9	0	0	485.118
12	99.14	0.4	13.8	10.3	0	0	0
13	97.76	4.1	96.5	72.4	0	0	0
14	97.92	5.5	383.3	287.5	0	0	0
15	99.24	5.6	275.8	206.8	0	0	0
16	100	-3.9	201.2	150.9	0	0	-183.82
17	96.9	1.2	427	320.2	0	0	0
18	99.94	22.4	177.9	133.4	0	0	0
19	100	6.5	184.6	138.4	0	0	225.956
20	97.86	9.8	114.5	85.9	0	0	574.588
21	100	-0.9	130.6	97.9	0	0	-79.705
22	100	-20.1	11.3	8.2	0	0	19.841
23	99.91	4.5	70.3	52	0	0	0
24	100	-19.6	193	144.7	0	0	-124.27
25	100	-12.4	220.6	142.9	0	0	119.428
26	100	-18.3	290.1	145	0	0	130.173
27	100	32.1	102	86.3	0	0	162.891
28	99.13	-6.8	110	89	0	0	0

Table 10: Summary of losses with SVC and parallel transmission lines

From Area/Zone	P Loss	Q Loss	P Gen	Q Gen	P Load	Q Load	Qc Shunt	Ql Shunt
	MW	MVar	MW	MVar	MW	MVar	MVar	MVar
Network	287.64	-588.417	4506.04	365.776	4218.4	3020.3	2085.949	19.841
Area 1	287.64	-588.417	4506.04	365.776	4218.4	3020.3	2085.949	19.841
Zone 1	287.64	-588.417	4506.04	365.776	4218.4	3020.3	2085.949	19.841

ISBN- 978-978-57388-7-2

5. CONCLUSION

Nigeria power transmission network cannot accommodate all the power simultaneously. Due to this inadequacy, method of load shedding is used to distribute power to the consumers. This therefore, results into stranded generation and eventual loss of economy. Incorporation of SVC and additional parallel transmission line to the transmission network is able to reduce power loss on the transmission line and can wheel more power thereby solve the problem of stranded generation.

REFERENCES

1. Alayande, A. S., Jimoh, A. A. and Yusuff, A. A. 2018. Reinforcement of Topologically Weak Power Networks Through Network Structural Characteristics Theory. *Int. J. Emerg. Electr. Power Syst.*, vol. 19, no. 3, pp. 1–11.
2. Alayande, A.S., Awosope, C. O.A., Okakwu, I. K., Ade-Ikuesan, O. O., and Alayande J. M. 2019. An Alternative Approach to Voltage Collapse Prediction in a Practical Nigerian 330-kV Interconnected Power Grid. *ABUAD Journal of Engineering Research and Development (AJERD),* ISSN: 2645-2685, Vol. 2, no. 1, pp 111-119.
3. Alok, K.M. and Amar K.B. 2012. Power System Stability Improvement Using FACTS Devices, *International Journal of Modern Engineering Research,* Vol.1, Issue.2, pp. 666-672.
4. Benzergua, F., Khalfalah, N., Chaker, A., Ramos, J.L.M., Riquelme, J. and Marano, A. 2012..Allocation of Static VAR Compensator in western Algerian Network. Mediamira Science Publisher, Vol.53, No. 1, pp. 69-73.
5. Charlangsut, A. Boonthienthong, M.and Rugthaicharoencheep, N. 2013. Transmission Expansion Planning with Economic Dispatch and N-1 Constraints. *International Journal of Electrical and Computer Engineering,* Vol. 7, no. 10, pp 1284-1287.
6. Guneet, K,, Gursewak, S.B. and Jaswanti. 2012. Static Var Compensator Placement by Genetic Algorithm. *International Journal of Electronics & Communication Technology,* Vol.3, Issue.2, pp. 111-117.
7. Reddy, D.V.B. 2013. Voltage Collapse Prediction and Voltage Stability Enhancemence by Using Static Var Compensator.International Journal of Engineering Research and
8. Applications, Vol.3, Issue.5, pp. 798-805.
9. Saravana, K.R. 2015. Power system performance enhancement using Flexible ac Transmission system devices. Memorial University of Newfoundland, St. John's Newfoundland and Labrador, Canada, Pp 1-12.