Kernel-Based Support Vector Machine (SVM) for Product Image Classification

S. A. Oyewole,
Durban University of Technology,
South Africa
oyewoledotstanley@gmail.com,

N. A. Azeez
University of Lagos,
Lagos, Nigeria
nazeez@unilag.edu.ng

B. A. Afere,
Federal Polytechnic Idah,
Idah, Kogi State, Nigeria
baaffere@yahoo.com

*corresponding author

ABSTRACT

Support Vector Machine (SVM) has been known for its potential to improve scalability and retrieval accuracy. However, SVM still have standing issues as regard accuracy and absence of simple rule to determine an appropriate kernel for a given dataset in a particular domain of knowledge. This can be traced to the fact that SVM kernels have varying properties, as such one good kernel that work effectively for a particular class of problems might perform poorly in other cases. Consequently, choosing and training with the right kernel becomes a very important challenge and a red-hot research problem in computer vision. In codicil, the quality of extracted image features has been found to have impact on the classification accuracy. As such, the histogram of oriented gradient (HOG) algorithm which has been widely reported in the literature to be effective for image extraction is used to extract both colour and grayscale features. The motivation for our study is to discover which SVM kernel is the best, considering their classification accuracy on e-commerce products, in both grey scale and oRGB colour models. E-commerce products datasets of 2,000 images obtained from PI 100 Microsoft corpus were used as training set and 1,000 as testing datasets. The training dataset is divided into 100 classes representing the different classes of e-commerce products. Experimental results on four (4) SVM kernels classier (Cauchy, quadratic, hyperbolic and Laplacian) using HOG descriptor, shows that Cauchy kernel had the best average classification result of 81.5% in oRGB color space. These experiments indicate a good direction for implementing an intelligent-based product image classification in e-commerce domain.

Key words: Classification, Product-image, SVM, HOG, Cauchy-kernel, oRGB

1. INTRODUCTION

Automatic product classification has found its place in e-commerce domain and it has been regarded as one of the most important key and precursors to growth in this domain Kannan *et al*, 2011; Nath *et al*, 2014). It involves associating classes to products from a large number of merchants to aid retrieval and for efficient customer usage. The performance of a classification model depends -- among other elements – on the type of descriptor and the classifier that is used (Jin, 2003). Thus far, most of the product classification approaches rely on the use of text tagging to describe product items. This method is plagued with several shortcomings such as overlapping text across classes (Kweon *et al*, 2008; Jang & Cho, 2014), intensive labour requirement (Lee & Cho, 2011), discrepancy in vocabulary usage (Witschel & Schmidt, 2006), spelling error (Chang *et al*, 2012) and undescriptive nature of text (Jang & Cho 2014). To address these issues, ideal about image-content based classification came to limelight and this later engendered the use of descriptors such as Speed-up Robust Feature Extractor (SURF)(Herbert et al, 2008), Scale Invariant Feature Transformation(SIFT)(Lowe, 1999), Linear Binary Patterns(LBP) (Ojala *et al,* 1996), and Histogram of Oriented Gradient (HOG)(Dalas and Trigg, 2005) . In this paper, we only consider the HOG, which it is the most commonly used.

On the aspect of classifier, there exist several classifiers such as Artificial Neural Network (ANN), Support Vector Machine (SVM), K-NN, Naïve-Bayes. SVM is widely recognised as one of the most powerful classifier and it has been applied by several authors for product image classification in e-commerce domain (Bergamaschi *et al*, 2002; Witschel & Schmidt, 2006; Jia *et al*, 2010; Banerji *et al*, 2011; Dharani & Aroquiara, 2013; Sandoval *et al*, 2014). The choice of SVM is guided by this wide acceptance as recoded in the literature and also its unique characteristics in handling image-based feature. Take for instance, to determine the category for an image; usually a large number of features are required. The SVM algorithm is able to take a large number of features for an image and combine them together to predict the category for that image. Unlike many other learning algorithms that tend to over-fit the training data when the number of features is large, SVM is able to alleviate the problem of overfitting by maximizing the classification margin (Jin, 2003). Secondly, SVM algorithm allows self-developed nonlinear multi-kernel learning(MKL) functions to be used as its kernel functions as long as they satisfies the Mercer condition, which can be very helpful in terms of exploiting the correlation between diverse features, while many other machine learning algorithms simply assume each feature is independent from the others(Burges, 1998). As such SVM classifier is equipped with the potentials to improve network scalability and retrieval accuracy in e commence domain.

However, identifying an appropriate kernel for given dataset to ameliorate accuracy is one major standing issues. This problem is particularly more challenging in ecommerce domain, due to plethora of dataset that abound, couple with intra and inter-class variation problem. Researchers have relied on familiarity and prior knowledge in selecting correct kernel and thereafter trying to optimize the kernel parameter via machine learning or trial and error. This method often limits the usefulness of SVMs to expert users, since different functions and parameters can have widely varying performance. The quality of extracted features has also been found to have impact on the classification accuracy (Wang *et al*, 2014). Other research works that have been done in this direction include the work of Junhua & Jing(2012), this researcher used contourlet transform to extract the hue components of HSV and then uses SVM classifiers to classify images. With 240 images in four categories, the researcher got accuracy in just two categories with 98% against 95% and 94.4% against 83.3% in both color and grey scale classification respectively.

In Akhloufil *et al* (2008) color texture classification framework was proposed for industrial products where they conducted a comparative study between grey level co-occurrence matrix in 3 color spaces – RGB, HSV and L*a*b* and local binary pattern(LBP) texture analysis approaches on four product categories. In the same vein, Banerji *et al* (2013), presented a new image descriptor called HaarHOG on both greyscale and color images. Using the descriptor a comparative assessment was done on four different color spaces — the RGB, the HSV, the YCbCr, and the oRGB — for image classification performance. Agrawal *et al* (2011) propose a content based color image classification using SVM and histogram of color component. The experiment was done on 500 images that are spread into four (4) different classes. In Paschos, 2001, the L*a*b* and HSV spaces have been found to outperform the RGB space using Gabor filters, with a maximum classification accuracy of about 82%.. Kumar *et al* (2013) propose extraction of image feature using color histogram in three color spaces – RGB, HSV and YCbCr for color classification. The number of classes considered in all the above mentioned works seems very small; a higher number of classes would have better positioned the applied methodologies.

2. STATEMENT OF PROBLEM

Classification has diverse application areas in our daily life. In order to realise effective result from any classification task, particularly kernel based SVM classification tasks; identifying an appropriate kernel for given dataset along with how to realise a discriminative feature are two challenging issues. This problem is particularly more challenging in e-commerce domain, due to plethora of dataset that abound, couple with intra and inter-class variation problem.

3. OBJECTIVE

This study is inspired by the critical need to improve classification accuracy of SVM based kernels classifier on 100 classes of e-commerce products using extracted image features. The objectives are in two folds: to extract both colour and greyscale features from 2000 images using HOG. The second paramount objective of this study is to compare and evaluate the performance of four (4) SVM classifiers on e-commerce product datasets obtained from PI 100 Microsoft corpus.

4. METHODOLOGY

In this section a brief description of the material and methodology used are provided. Further detailed description on the theory of oRGB color model, HOG and SVM in dealing with classification problems can be found in (Bratkova, et al 2009, Dalas and Trigg, 2005; Vapnik 1995).

4. IMAGE BASED FEATURES IN ORGB COLOR MODEL AND GRAYSCALE MODEL

Color image information is usually summarized in a three-dimensional color space**.** Examples of color models commonly employed for product image classification are RGB, LAB, oRGB, XYZ, CMYK, YIQ, YUV, YCBCR and HSV. Color image information is usually summarized in a three-dimensional color space**.** Examples of color models commonly employed for product image classification are RGB, LAB, oRGB, XYZ, CMYK, YIQ, YUV, YCBCR and HSV. The oRGB is one of the most recent color model used in the (Bratkova *et al*, 2009). This opponent color model is an invertible transform (Eqn.1) & (Eqn. 2) from RGB and very similar to HSV. However, it adds a non-linear perceptual brightness to HSV which made it work efficiently for computer graphics and also computational applications such as color transfer where HSV is weaken. Primarily the oRGB color space is based on the three fundamental psychological opponent axes: white-black, red-green, and yellow-blue. The LC1C2 color space has three axes: *L* channel which contains the luminance information and its values range between [0, 1], this is follow by C1 and C2 which contained the color information. The value of C1 and C2 lies within [-1, 1] and [-0.8660, 0.8660] respectively. The transformation from the RGB color model to the oRGB color model is given by:

$$\begin{bmatrix} L \\ C_1 \\ C_2 \end{bmatrix} = \begin{bmatrix} 0.2990 & 0.5870 & 0.1140 \\ 0.5000 & 0.5000 & -1.0000 \\ 0.8660 & -08660 & 0.0000 \end{bmatrix} \begin{bmatrix} R \\ G \\ B \end{bmatrix} \quad (1)$$

While it's inverse is represented as

$$\begin{bmatrix} R \\ G \\ B \end{bmatrix} = \begin{bmatrix} 1.0000 & 0.1140 & 0.7436 \\ 1.0000 & 0.1140 & -0.4111 \\ 1.0000 & -08660 & 0.0000 \end{bmatrix} \begin{bmatrix} L \\ C_1 \\ C_2 \end{bmatrix} \quad (2)$$

This color model has been shown to give better performance in several image processing tasks (Sande & Snoek, 2008; Weijer & Gevers, 2005; Banerji *et al*, 2011; Wang *et al*, 2014).

4.2 HOG for Image Feature Extraction

The ideal of histogram of oriented gradient was first introduced by Dalal & Triggs,(2005). This descriptor is one of the local descriptors that have been applied efficiently in variety of problem of computer vision (Rybski *et al*, 2010; Satpathy, 2010). HOG is based on the principle that local object appearance and shape in an image can be represented by the distribution of intensity gradients or edge orientations. This descriptor was explored in this work to extract representative features from the product images. The image is decomposed into local regions and from each local region gradient orientation and its magnitude are calculated. In each bin of gradient orientation of histogram, corresponding magnitudes are accumulated for the local region. It is believed that HOG is robust to illumination variation for recognition problems. Here, we calculated HOG for each image colour channel is divided into smaller rectangular block of 9 x 9 pixels blocks. Each block is further divided into 9 cells of 3 x3 pixels. This 9ient orientation that ranges from 0^0 - 180^0 was used. The gradient orientation histogram is computed for each cell as follows:

$$h(k) = \sum_{d_{i,j} \in \theta_k} m_{i,j} \quad (3)$$

$$m_{i,j} = \sqrt{dx_{i,j}^2 + dy_{i,j}^2} \quad (4)$$

$$d_{i,j} = arctan \frac{dy_{i,j}}{dx_{i,j}} - \theta(k) \quad (5)$$

$$dx_{i,j} = I_{i,j} - I_{i+1,j} \quad (6)$$

$$dy_{i,j} = I_{i,j} - I_{i,j+1} \quad (7)$$

$$\theta(k) = arctan \frac{dy_{i,j}}{dx_{i,j}} \quad 0 \leq \theta(k) \leq 360 \quad (8)$$

where $I_{i,j}$ is the i,j pixel value of each sub-region, $m_{i,j}$ is the gradient magnitude of the pixel i,j, $d_{i,j}$ is the gradient direction at pixel i,j, $h(k)$ is the kth dimension $h(k)$ of the gradient histogram represents the total intensity of the pixel gradient whose direction lies in the *kth* direction bin $d_{\nu}, k = 0 \ to \ 8$. The direction bins are defined by the relative angle to the dominant gradient direction *D* of the image region. Finally, combing all the Gradient orientation Histogram in the three channels together form feature vector of size 243-dimension (i.e. 9 x 3 x 3 x 3 channels) for one product image. Earlier before the extraction stage, the image feature must have been converted to oRGB colour space.

4.3 Classification using Kernel-Based SVM Classifier

The concept of Support Vector Machine was introduced by Vapnik(1995). SVM is based on Statistical Learning Theory (SLT) and class of hyperplanes. SVM can be expressed as thus: suppose there is a set of training data of *nimages* data points $\{(x_1, y_1), (x_2, y_2) \ldots \ldots (x_n, y_n)\}$ where $x_i \in \Re^d$, is the ith input vector and $y_i \in \{+1, -1\}$ is the corresponding class label. The basic work of SVM is to find the decision boundary $\vec{w}$ that is able to separate the positive examples from the negative examples. More precisely, we would like all the positive examples $\vec{x}_p$ to be above the boundary, i.e. $\vec{w}.\vec{x}_p > 0$ and all negative examples to be underneath the boundary, i.e. $\vec{w}.\vec{x}_p <= 0$. Since there may be many different classification boundaries satisfying these conditions, the SVM algorithm always chooses the one with the maximum margin. When the samples are linear separable, the SVM can separate them with the largest margin between the two classes without any wrong separated points. The hyperplane could be represented as $w.x_i + b = 0$. It can classify a sample point x_i according to the following decision function:

$$f(x_i) = sign(w.x_i + b) = \begin{cases} +1 & if \quad y_i = +1 \\ -1 & if \quad y_i = -1 \end{cases} \quad (9)$$

This can be achieved by solving the following quadratic program:

$$\begin{cases} min & \frac{1}{2}\|w\|^2 \\ s.t & y_i(x_i.w+b) \geq 1, \quad i = 1,2,\ldots\ldots n \end{cases} \tag{10}$$

Where w is weight vector and $b \in \Re$ is the threshold value. Thus, training of the SVM classifier is to find w and *b* that maximize the margin between the two classes.

Furthermore, in a nonlinearly separable case (which is the case in this study), the searching of suitable hyperplane in an input space is too restrictive to be of practical use. SVM tactically handle this situation in two ways: by replacing the dot product between the classification boundary $\overrightarrow{w}$ and the instance $\overrightarrow{x}$ with a kernel function $K(\overrightarrow{w}.\overrightarrow{x})$. This function maps the input space into a higher dimension feature space and search for the optimal hyperplane in this feature space by using a nonlinear function $\Phi(x):\Re^d \rightarrow H$. Popular SVM kernel functions are cauchy, linear, laplacian, polynomial, radial basis function, quadratic and. A kernel function must satisfy the Mercer's condition which is detailed in (Minh et al 2006). Table I show formula of kernel function used in this work.

In codicil, SVM handles nonlinearly separable case by allowing some difficult training examples to be incorrectly classified. This is tracked by introducing a slack variable $\xi_i \in \{1,2,3\ldots\ldots n\}$ to measure the amount of violation of the constraints. The modified optimization problem becomes as:

Where w is weight vector and $b \in \Re$ is the threshold value. Thus, training of the SVM classifier is to find w and *b* that maximize the margin between the two classes.

Furthermore, in a nonlinearly separable case (which is the case in this study), the searching of suitable hyperplane in an input space is too restrictive to be of practical use. SVM tactically handle this situation in
two ways: by replacing the dot product between the classification boundary $\overrightarrow{w}$ and the instance $\overrightarrow{x}$ with a kernel function $K(\overrightarrow{w}.\overrightarrow{x})$. This function maps the input space into a higher dimension feature space and
search for the optimal hyperplane in this feature space by using a nonlinear function $\Phi(x):\Re^d \rightarrow H$. Popular SVM kernel functions are cauchy, linear, laplacian, polynomial, radial basis function, quadratic and. A kernel function must satisfy the Mercer's condition which is detailed in (Minh et al 2006). Table I show formula of kernel function used in this work.

In codicil, SVM handles nonlinearly separable case by allowing some difficult training examples to be incorrectly classified. This is tracked by introducing a slack variable $\xi_i \in \{1,2,3\ldots\ldots n\}$ to measure the amount of violation of the constraints. The modified optimization problem becomes as:

$$\begin{cases} \min & \frac{1}{2}\|w\|^2 + C\sum_{i=1}^{n}\xi_i \\ s.t & y_i(w^T.x_i+b) \geq 1-\xi_i, \; i = 1,2,\ldots\ldots n \\ & and \;\; \xi_i \geq 0 \; i = 1,2,\ldots\ldots n \end{cases} \tag{11}$$

Where C is a parameter which must be determine beforehand to determine the cost of constraint violation, and the larger *C* means a higher penalty which is assigned to empirical errors. Tuning this parameter can make balance between margin maximization and classification violation.

Table I: List of kernel function

Kernel	Formula
Hyperbolic	$K(x,y) = x.y + c$
Laplacian	$K(x,y) = (1 + x.y)^d \quad d = 3$
Quadratic	$K(x,y) = (1 + x.y)^2$
Cauchy	$K(x,y) = \frac{1}{1 + \frac{\lvert x - y \rvert^2}{\sigma^2}}$

3.4 PROPOSED FRAMEWORK

Product images which are usually represented in RGB color model. Fig. 2 shows the proposed framework in this paper. Given that the input image is in RGB format, we used Eqn. 1 to convert the target product image into oRGB format. Thereafter, the HOG feature for each channel is obtained and then concatenated into one dimensional vector space.

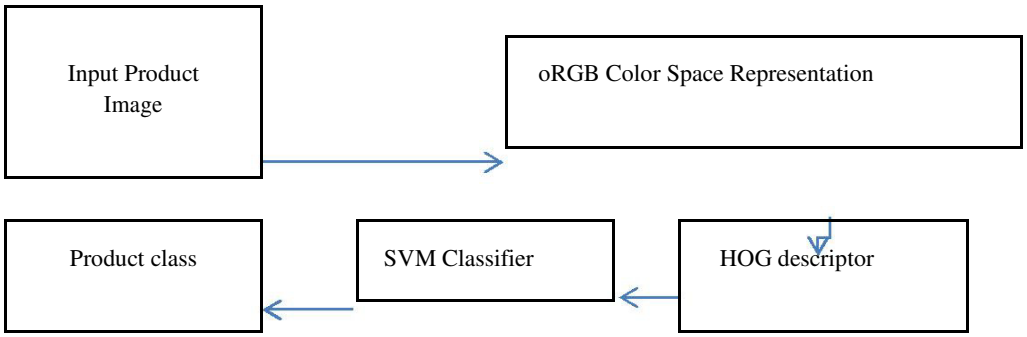

Fig.2. Framework for HOG-SVM algorithm

In the same manner HOG features of all product images in grey level are also extracted. The extracted features are then used to train each of the SVM kernel classifier and their classification accuracies were determined.

5.0 DATASET

The PI 100 dataset (Xie, et al 2008) holds 10,000 images divided into 100 classes. The images have high intra-class variability each classes contain 100 images. The images represent a diverse set of lighting conditions, poses, backgrounds, and sizes. Images are in color, and in JPEG format with only a small percentage in grayscale.

Figure 2. Sample of e-commerce product images from PI 100

Each image size is of 100 X 100 pixels resolution. Figure 2 shows some sample images from this dataset. For each class, we make use of 20 images for training and 10 images for testing.

6.0 EXPERIMENTAL RESULTS AND DISCUSSIONS

In this section, the classification performance of each SVM kernel function in both color and grayscale are discussed and compared. In this paper, we use 4 kernel functions in classification process as shown in the experimental results in Table II. Cauchy Linear kernel function gives rather high accuracy when compared with other kernel functions.

TABLE II: Results of SVM Kernels classification in oRGB Color Model

SVM Kernel	1	2	3	4	5	Average
Exponential	53.5%	51.5%	54.0%	52.5%	53.0%	52.9%
Quadratic	77.0%	76.0%	75.0%	78.0%	79.5%	77.1%
Laplacian	29.5%	31.0%	28.5%	33.0%	30.5%	30.5%
Cauchy	79.0%	78.5%	80.5%	80.0%	82.5%	80.1%

The cauchy kernel gave accuracy rates ranges between 80.00% - 82.50% with average of 80.1. This is shortly followed by quadratic kernel function which obtains medium accuracy between 70.00% - 79.05%.

TABLE III: Results of SVM Kernels classification in Grayscale Color Model

SVM Kernel	1	2	3	4	5	Average
Exponential	49.0%	51.5%	54.0%	52.5%	53.0%	52.9%
Quadratic	73.0%	74.0%	68.5%	74.0%	72.0%	72.3%
Laplacian	25.0%	27.0%	26.0%	28.0%	30.5%	27.2%
Cauchy	76.0%	77.5%	74.0%	72.5%	78.5%	75.7%

In the same vein, grey scale image gives lower accuracy in the range of 72.50% – 78.50% in Cauchy. Laplacian and exponential kernel functions get low accuracy in all kernel functions. Average classification accuracy when using oRGB + HOG with cauchy kernel function is 80.10% and the accuracy of classification when with grey scale is 75.50%. The average class result of Laplacian and exponential function are rather low as shown in Table II and Table III.

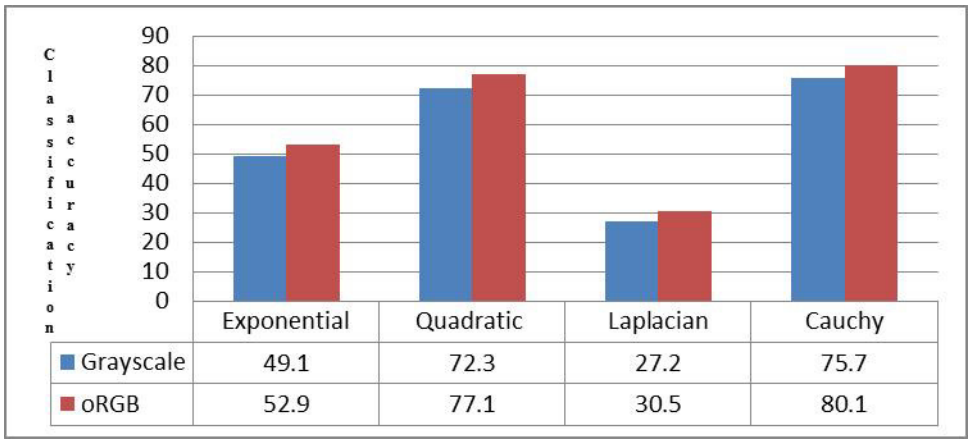

Table IV: Histogram of Classification Accuracy of four SVM-Kernels

7. CONCLUSIONS

Classification of product images in e-commerce using kernel based SVM and HOG in oRGB color model, using SVM Cauchy kernel function is quite efficient for classification. With the color feature we have been able to realise an increase of about 3.00% t0 5.00% classification accuracy. This increase is in agreement with the popular stand in the literature, that color feature is more discriminative than grayscale. Hence, with HOG feature when use with SVM cauchy kernel function already shows good accuracy in terms of classification. It can be inferred from these results that the Cauchy kernel maps the synchronized product dataset into a higher dimensional space that allows for the computation of a high-quality decision boundary that classified 2,000 images into 100 categories. The outstanding performance of this SVM configuration makes it an intelligent choice in the development of a system for product classification in ecommerce domain.

REFERENCES

1. Agrawal, S., Nishchal, K. Verma, Prateek, T., Pradip S.,(2011). Content Based Color Image Classification using SVM. 2011 8th *International Conference on Information Technology: New Generations* pg. 1089 -1094.
2. Akhloufi, M.A., Maldague, X. & Ben, W. Larbi, (2008). A New Color-Texture Approach for Industrial Products Inspection," *Journal of Multimedia* (JMM), 3 (3), 44-50 (2008).
3. Banerji, A., Sinha, & Liu, C., (2013). HaarHOG: Improving the HOG Descriptor for Image Classification. In IEEE *International Conference on Systems*, Man, and Cybernetics , Manchester, UK, October 13-16, 2013.
4. Banerji, S., Verma, A., & Liu, C., (2011). Novel Colour LBP Descriptors for Scene and Image Texture Classification, In : 15th *international conference on Image processing*, Computer Vision, and Pattern Recognition, July 18-21, Las Vegas, Nevada(2011).
5. Banerji, S. Verma, A. Liu, C., (2011). Novel Colour LBP Descriptors for Scene and Image Texture Classification, In : 15th *international conference on Image processing, Computer Vision, and Pattern Recognition*, July 18-21, Las Vegas, Nevada(2011).
6. Bergamaschi, S. and Guerra, F. & Vincini. M., (2002). Product Classification Integration for E-commerce, *Proceedings of the 13th International Workshop on Database and Expert Systems Applications* (DEXA'02), vol.2, pp. 1529-4188/02, 2002.
7. Bratkova, M., Boulos, S., & Shirley, S.,(2009). oRGB practical opponent color space for computer graphics, *IEEE Computer Graphics & Applications* 2009;29(1): 42–55
8. Burges, C., J., C., (1998). A Tutorial on Support Vector Machine for Pattern Recognition, Knowledge Discovery and Data Mining, 2(2), 1998.
9. Chang, R., Lin, S., Ho, J., Fann, C. and Wang, Y.,(2012). A Novel Content Based Image Retrieval System using K-means/KNN with Feature Extraction . ComSIS Vol. 9, No. 4, Special Issue, December 2012
10. Dalal, N., & Triggs, B., (2005). Histograms of oriented gradients for human detection. In *CVPR*, 2005
11. Dharani, T., Aroquiaraj, L., (2013). Content Based Image Retrieval System Using Feature Classification with Modified KNN Algorithm" in (IJCTT) – volume 4 Issue 7–July 2013.
12. Herbert B., Andreas E., Tinne T., Luc V., Gool,(2008). SURF: Speeded Up Robust Features", Computer Vision and Image Understanding (CVIU), Vol. 110, No. 3, pp. 346–359, 2008.
13. Jang, H.,& Cho, S., (2014). Flickr Image Classification using SIFT Algorithm. *Life Science Journal* 2014 11(7) pg. 607-611.

14. Jia, S., Gu, Y., Zou, J., (2010). Product Image Classification with Multiple Features combination," *International conference on E-Business Intelligence*, Atlantis Press, 2010, pp. 469 -475.
15. Jin, R., Hauptmann, A., G., Yan, R., (2003).Image Classification Using a Bigram Model. http://repository.cmu.edu/compsci.
16. Junhua, C., China, K, Jing, L.,(2012). Research on Color Image Classification Based on HSV Color Space," *Second Inter. Conference on Instrumentation & Measurement, Computer, Communication and Control*, 1109/IMCCC.2012.226 2012,pg 944 -947
17. Kannan, A., Talukdar, P. P., Rasiwasia, N.,& Ke. Q. (2011).Improving product classification using images. In ICDM, pages 310-319, 2011.
18. Kumar, T., S., Dey, S. & Shikhar, P., (2013). Effect of Various Kernels and Feature Selection Methods on SVM Performance for Detecting Email Spams, *International Journal of Computer Applications* 66, no. 21, 2013.
19. Kweon, DH., Hong, JH.,& Cho, S.(2008). Re-ranking using WordNet in Tag-based Web Image Retrieval. *Proceedings of the Korea Multimedia Society Fall Conference,* 2008.
20. Lee, SJ., Cho, S.,(2011). Tagged Web Image Retrieval Re-ranking with Wikipedia-based Semantic Relatedness. *Journal of Korea Multimedia Society*, 2011;1(11): 1491-99
21. Lowe, D., G.,(1999). Object recognition from local scale-invariant features, *Proceedings of the International Conference on Compute*r *Vision*. 2. pp. 11501157, 1999.
22. Minh, H., Q., Niyogi, P., Yao, Y., (2006). Mercer's theorem, feature maps, and smoothing, *In: Proceedings of 19th Annual Conference on Learning Theory*, Pittsburg, June 2006. Springer, Berlin (2006).
23. Ojala, T., Pietik¨ainen, M., and Harwood, D., (1996). A comparative study of texture measures with classification based on feature distributions, *Pattern Recognition*, vol. 29,no. 1, pp. 51–59, 1996.
24. Nath, S. S., Mishra, G., Kar, Chakraborty, S.,& Dey, N., (2014). A Survey of Image Classification Methods and Techniques. *2014 International Conference on Control, Instrumentation, Communication and Computational Technologies (ICCICCT) 978-1*-Pg.554 -557.
25. Paschos, G.,(2001). Perceptually uniform color spaces for color texture analysis: an empirical evaluation, *IEEE Trans. IP*, 10(6), 932-037 (2001).
26. Rybski, P., Huber, D., Morris, D., & Hoffman, R., (2010). Visual classification of coarse vehicle orientation using histogram of oriented gradients features. *In IEEE Intelligent Vehicles Symposium* (IV), 2010, pages 921 –928, June 2010.
27. Satpathy, A., Jiang, X., & Eng H.-L., (2010). Extended histograms of gradients feature for human detection. In 17th *IEEE International Conference on Image Processing* (ICIP), 2010, pages 3473 – 3476, Sept. 2010.
28. Sandoval, G. Vazquez, R.A., Garcia, P., Ambrosio, J., (2014). Crop classification using different color spaces and rbf neural networks, Artif. Intell. Soft Comput., 8467 (2014), pp. 598–609.
29. Sande, T. G. & Snoek, C., G., (2008). Color descriptors for object category recognition," In In European Conference on Color in Graphics, Imaging and Vision, volume 2, (2008) pp 378–381.
30. Vapnik, V., (1995).The Nature of Statistical Learning Theory. Springer-Verlag, New York, 1995.
31. Wang , X., Hansch, R., Ma, L., & Hellwich, O., (2014). Comparison of Different Color Spaces for Image Segmentation using Graph-cut," VISAPP 2014 International Conference on Computer Vision Theory and Applications 301-308.
32. Wang, X., Hansch, R., Ma, L., & Hellwich, O.,(2014). Comparison of Different Color Spaces for Image Segmentation using Graph-cut," VISAPP 2014 *International Conference on Computer Vision Theory and Applications* 301-308.
33. Weijer,. J., V., D., & Gevers, T., (2005). Boosting saliency in color image features, In Computer Vision and Pattern Recognition (CVPR), vol 1, 2005, pp 365– 372.
34. Witschel, H., F., & Schmidt, F., (2006). Information Structuring and Product Classification TSTT' 2006 Beijing.
35. Witschel, H., F., & Schmidt, F., (2006). Information Structuring and Product Classification, In *TSTT '06: Proceedings of the International Conference on Terminology, Standardization and Technology Transfer, Beijing*, 2006.
36. Xie, X., Lu, L., Jia, M.,(2008). Mobile search with multimodal queries [J], *Proceedings of the IEEE*, 2008, 96(4): 589-601.