Digital Innovations
& Contemporary Research in SCIENCE, ENGINEERING & TECHNOLOGY
Vol. 10. No. 1, 2022

Article Citation Format
Akeem T. Otapo, Lateef A. Saliu, Kazeem A. Sodiq, Isaac O. Onadokun & Abideen A. Musilim (2022): Development of A Mobile Application-Based Fingerprint Attendance System: A Case of Computer Engineering Department, Yaba College of Technology, Lagos-Nigeria . Journal of Digital Innovations & Contemporary Research in Science, Engineering & Technology. Vol. 10 No. 1. Pp 63-72

Article Progress Time Stamps

Article Type: Research Article
Manuscript Received: 13th Dec, 2021
Review Type: Blind
Final Acceptance:: 19th March, 2022

Development of A Mobile Application-Based Fingerprint Attendance System: A Case of Computer Engineering Department, Yaba College of Technology, Lagos-Nigeria

Akeem T. Otapo[1], Lateef A. Saliu[2], Kazeem A. Sodiq[3], Isaac O. Onadokun[4] & Abideen A. Musilim[5]

[1, 2, 3]Department of Computer Engineering, Yaba College of Technology, Lagos State, Nigeria
[4]Department of Computer Technology, Yaba College of Technology, Lagos State, Nigeria.
[5] Department of Welding and Fabrication Engineering, Yaba College of Technology, Lagos State, Nigeria.
E-mail: [1]akeem.otapo@yabatech.edu.ng
Phone: +2348064054825

ABSTRACT

The Fingerprint Attendance System aims to automate the attendance process in a school by using biometric technologies. By doing away with the need to call out names, this saves time and offers a reliable method of tracking attendance. Presently, the majority of fraudulent acts performed by the students could be reduced and it can also eliminate problems like missing papers without the assistance of the attendant (Teacher, Lecturer) using this simple and convenient device that may be carried in the hands, put on a table, or mounted to a wall in order to register attendance. The device may be passed around and students could record their attendance during the lecture, but it would be put on a table near the attendant or preferably fastened to the wall near the class or lecture room's entrance door. To record their presence in class, students would be required to lay their finger on the sensor (fingerprint scanner). This fingerprint attendance system is accompanied by an Android mobile application which helps to interact with the user via a Graphical User Interface (GUI). The mobile application is used to register students' names and matric numbers to their respective enrolled fingerprint IDs. It takes and saves the Students Attendance List which can be exported as a PDF file for viewing and printing and/or sharing to social media. It also has other features for search and filtering of a student's attendance, Campus GPS to know class location, and voice alert to instantly notify the attendant when an attendee (student) is taking an attendance. Generally, the mobile app helps the attendant to manage the device and attendance. Being part of the criteria for this research work, over 39 students spanning through ND1 to HND 2 full-time students have been properly enrolled on this Fingerprint attendance system. A total of about 980 IDs for fingerprint capture can be recorded on the fingerprint module. Hence, it can accommodate the entire number of full-time students in the department of Computer Engineering.

Keyword: Fingerprint, Attendance, Mobile Application, Register, Attendance, Graphical User Interface

1. INTRODUCTION

Due to its simplicity and high accuracy, fingerprint verification remains the most widely used biometric technique. Fingerprint verification is one of the oldest biometric processes. The distinctive pattern that each human has on their fingertips at birth serves as a means of identification and differentiation between individuals. One cannot exaggerate the advantages of implementing this program in a school or company. The fingerprint identification and verification technology has been chosen to replace the conventional method since it is faster and does away with all of the limitations of the attendance record booklet. Each classroom or test hall should include a fingerprint detecting device, and students should swipe their finger across the sensor to identify their attendance in the class or exam. The records of the students are kept in the database for verification purposes. When a student swipes his or her finger across the scanner, a check is performed on the student.

The system reads fingerprints from the fingerprint module and compares them to fingerprints that have already been stored in its database. If the data in the database and the fingerprint saved on the device match, the system will recognize attendance. If the fingerprint module database's data and the finger specifics don't match, a red LED will turn on, signalling security personnel to take action. To save and review the list of students whose attendance is being taken, the system can be utilized both independently and in conjunction with a mobile phone.

2. LITERATURE REVIEW

According to Somasundaram et al. (2016), a mobile-based attendance management system that was used to track students' attendance was implemented. The method recorded attendance by requiring users to register on a website before recording their attendance. On the other side, the student makes use of a smartphone with an Android app that enables text messaging between them and the professor. The system's major drawback is that it is impossible to track attendance for the day if the server goes down.

A project named "Development of academic attendance management system leveraging Bluetooth technology" is part of Kamal's (2015) body of work. An Arduino UNO, an Adafruit Fingerprint Sensor, an HC-05 Bluetooth Module (Master/Slave), and a laptop computer make up this attendance-control system. The aforementioned parts work together to compile student attendance, which is subsequently wirelessly transmitted to the laptop for examination. The primary drawback of this strategy is that neither the attendance amount nor the hand-held device's operating time are indicated. Even though the Bluetooth device's communication range is just 10 meters, this can be managed and handled on average by positioning the fingerprint reader in a fixed location inside the laptop's connectivity range.

In order to address the issue of lecture attendance in higher education institutions in underdeveloped countries, Shoewu et al. (2011) proposed an electronic card-based solution. This system used a single chip computer with subsystems linked up serially to the serial port of the digital computer. Not all computers have a serial port, which is one disadvantage of the technology. Additionally, it is possible to copy or clone the electronic card. For academic surveillance, Tabassam et al. (2009) created a fingerprint identification approach. The system incorporates a fingerprint scanner for biometric authentication and was developed with Microsoft Visual Studio 2008 and SQL Server 2005 Digital Personal Software Development Kits. The system has a 98 percent success rate according to evaluations; however, it is lacking a feedback mechanism in case of imitation.

3. METHODOLOGY

The block diagram used for this project' is as shown in figure 1 below. The design methodology involves using a rechargeable 12V Lithium Polymer (LiPo) Battery to power the complete system. The Battery has a capacity of 3.8AHr which is suitable to supply the required 0.44A current required by the entire circuit. The Liquid Crystal Display Unit is a 16 x 2 matrix display unit, meaning that it can display output in 16 columns and 2 rows of characters at once. An open-source microcontroller board built around the Microchip ATmega328P processor has been produced by Arduino.cc. The board features several digital and analog input/output pins that can be connected to expansion boards and other devices. The Atmega328 programmable processor is the foundation of the Arduino Uno R3 Board, a programmable board featuring a universal asynchronous receiver-transmitter (UART). The Board was designed to run the entire system, serving as the project's brain thanks to its programming.

The Arduino Uno R3 Board's primary functions were to read the recorded fingerprint ID from the fingerprint sensor module and then serially output it to the Android Application platform via the Bluetooth module. The C++ programming language was used to program the Arduino. The HC-05 Bluetooth module was utilized. The Bluetooth module's primary role is to facilitate data transfer between the finger print circuit and the smartphone. The student's registered fingerprint ID is included in some of the data being transmitted. For example, if the student's ID is 2, when the student places his or her finger on the fingerprint sensor, the sensor reads the image of the student's finger and checks for a match; if a match is found, the sensor outputs ID 2 to the Arduino, which then sends ID 2 serially to the user's phone/mobile application for attendance taking.

The 4x3 Matrix Keypad is a 12-button keypad that provides a useful human interface component for microcontroller projects; it’s made of a thin, flexible membrane material with an adhesive backing so you can attach it too nearly anything. Each switch is connected to a row on one side and a column on the other. For example, if we push switch number 1, the row's input is recorded at the column's output. Because the keys are linked in a matrix, scanning the pad requires just 7 microcontroller pins (3 columns and 4 rows). This is a biometric fingerprint reader/sensor with an R305 module and a TTL UART interface for direct connection to the Arduino Uno R3 Board (a UART Microcontroller). The user can save fingerprint data in the module and set it to identify the individual in 1:1 or 1: N mode. This module can connect to any 3.3V or 5V microcontroller directly; however, it will need a level converter/serial adapter to connect to a PC's serial port.

Typically, the fingerprint sensing method entails collecting the fingerprint picture, extracting the distinctive characteristics of the fingerprint, and then either saving a digital template of the fingerprint or comparing the current image to the saved fingerprint templates. A high-precision, high-performance matching algorithm and a high-capacity flash chip are included in the R305 biometric fingerprint module. It operates by analyzing fingerprint images, matching them, searching for them in memory, and executing the necessary operations. It also communicates with microcontrollers through serial communication. It is not able to modify the default Baud Rate of 57600. Up to 980 fingerprints can be stored in this module. It comes with a USB connector that may be used to connect it straight to a computer if necessary.

The Android Mobile Application (Attendance System) serves as the graphical interface to interact majorly with the user/attendant. The microcontroller used in the device has a limited storage memory, the mobile application was used as a storage medium where all students' names and registration/matriculation numbers are stored, attendance are taken, attendance lists are stored for future viewing, course title and class information are stored, etc. That is because the mobile phone has a larger storage capacity than the microcontroller. The Students Attendance List taken and saved can be exported as a PDF file for viewing and printing and/or sharing to social media. The app also has other features for search and filtering of a student's attendance, Campus GPS to know class location, and voice alert to instantly notify the attendant (e.g. lecturer) when an attendee (e.g. student) is taking an attendance. Generally, the mobile app helps the attendant to manage the attendance taken as well as the device.

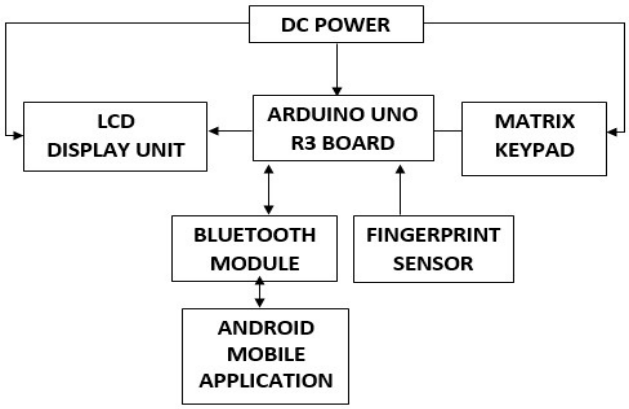

Figure1: Circuit Block Diagram of Project

3.1 Complete Electronic Circuit

Figure 2a and 2b below shows the complete electronic circuit (Schematic) for the design.

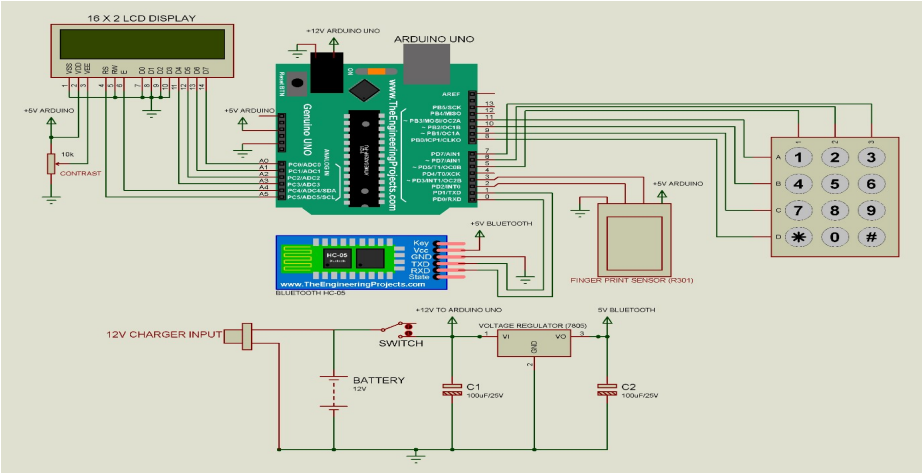

Figure 2a: Schematic Circuit Diagram

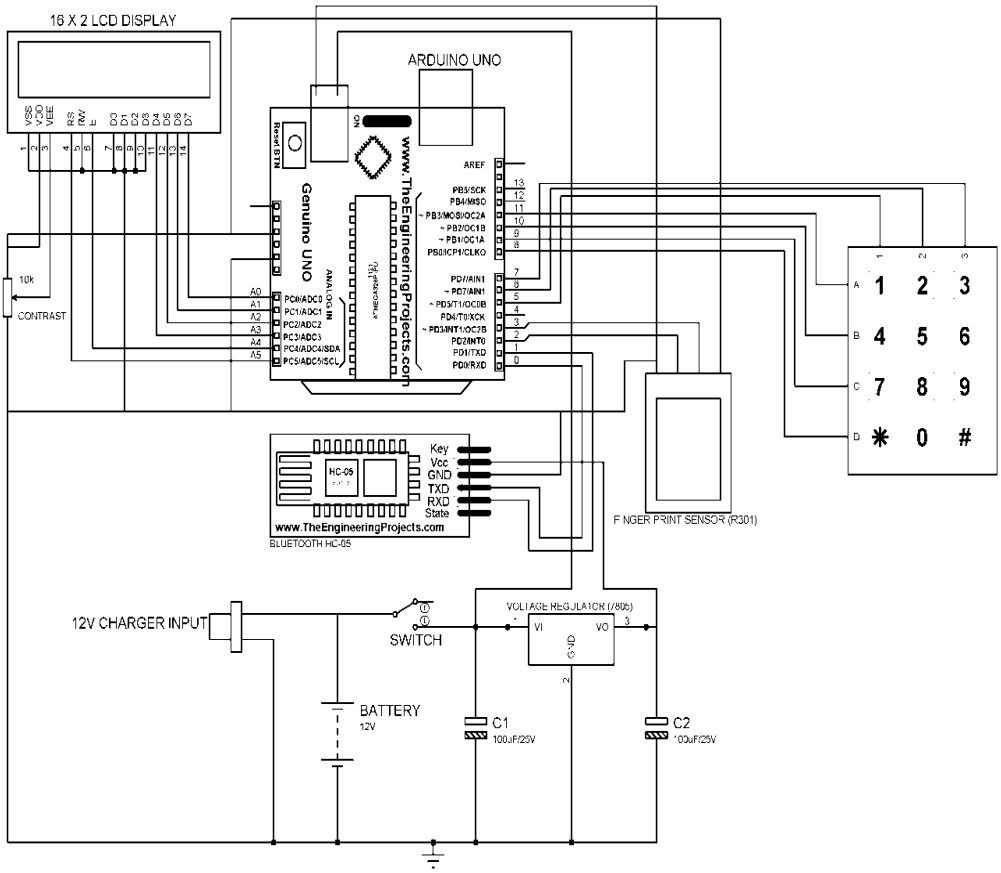

Figure 2b: Schematic Circuit Diagram

3.2 Design Procedures

During this investigation, it was discovered that there are various methods to creating a Fingerprint Attendance System. The usage of a Fingerprint Sensor Module is the same in all approaches, and the difference was in the Bluetooth data transmission with a smartphone device. The project could be done automatically though it was manual in the following steps:

Step 1: Find the components and equipment you'll need to manage your time while designing.

Step 2: Testing each component with a meter to guarantee correct operation and maintain specification.

Step 3: Put the components on the project board and check the adjustments to prevent short circuiting.

Step 4: Pre-testing the assembled components on a project board, checking functionality at various stages, and making some tweaks.

Step 5: The components are moved to a Vero board in step five, and any necessary soldering joints are then made. This point was reached with due consideration.

Sixth 6: Testing the soldered project, then putting it in a plastic box and testing it again to make sure no component is damaged.

Step 7: Next, program the Arduino Uno R3 Board and create the Android mobile application to enable serial Bluetooth communication between the device and its user.

3.3 Android-based Mobile Application GUI

The design and programming of the Android mobile application were done in the Android Studio. Figures 3a and 3b below demonstrate the Graphic User Interface perspective of the mobile application:

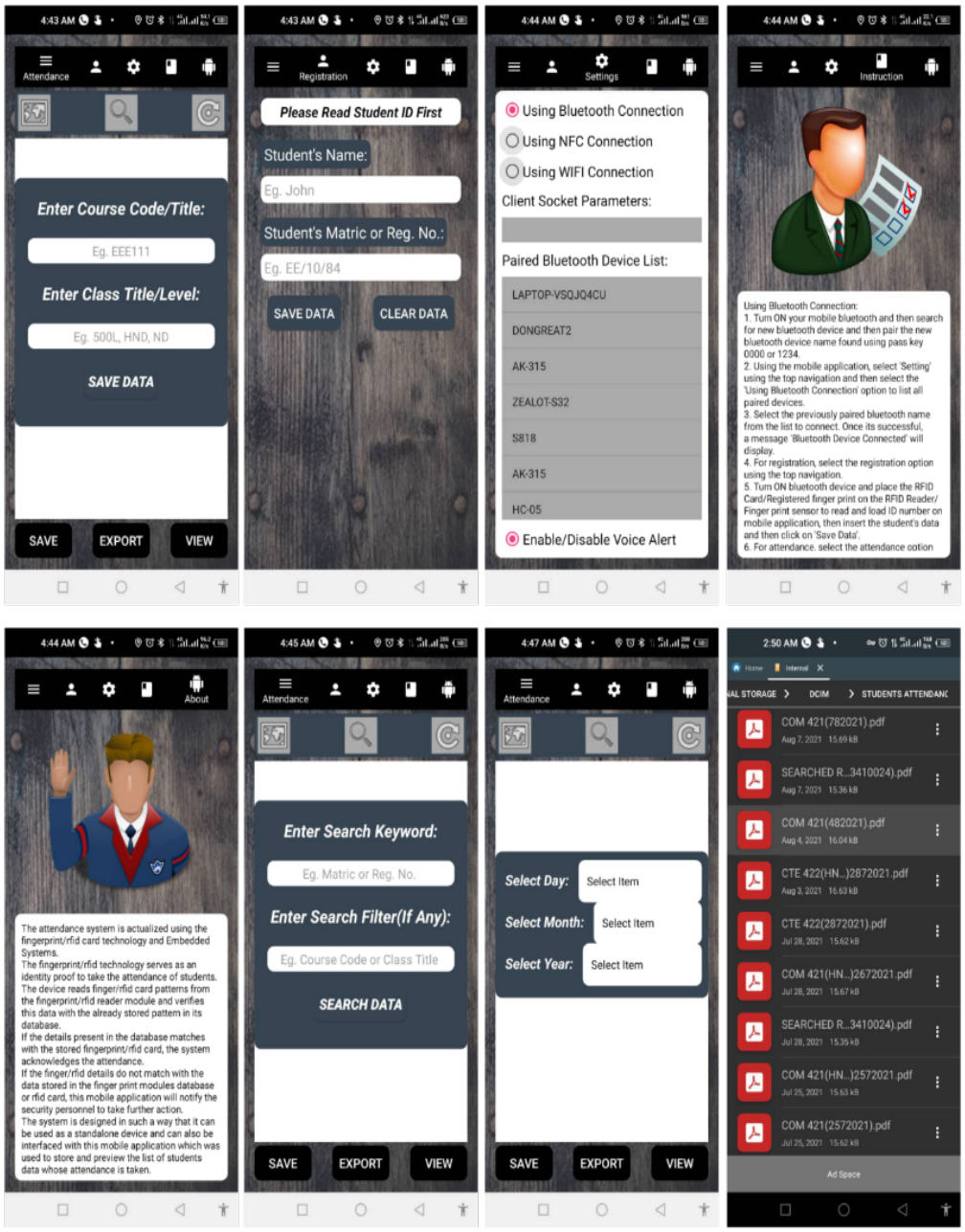

Figure 3a: Various GUI of the Android- based Mobile Application

Figure 3b: Various GUI of the Android-based Mobile Application

The Project Flow Chart of the whole project is as shown in figure 4 below:

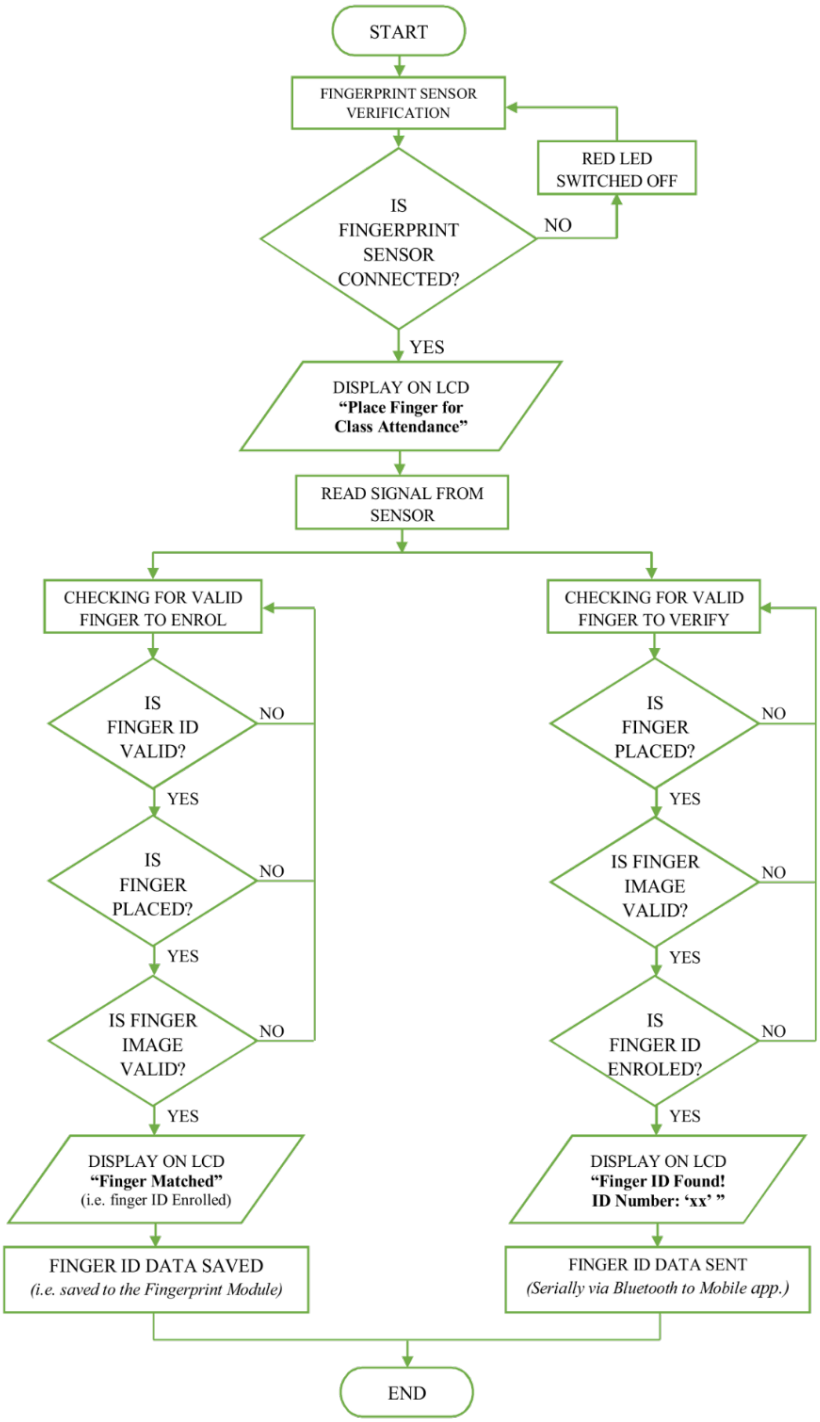

Figure 4 : Project Flow Chart

4. TESTING

Following the development of the system, the process of system testing must be continued to ensure that the system is bug-free, hence each attendant have to register to its mobile app the entire students with the respective enrolled fingerprint ID.The finger print of each student is placed on the scanners as shown in figure to capture the student finger print into the system mobile App database the student would be generated an ID and the student can computer his biodata such as Name, Matric numbers, Course title and course code. Anytime the student comes up for classes he would present his finger and the system would match the presented fingerprint with that registered one in the database.

Figure 5: Snapshot of the Project Device Aesthetics

5. CONCLUSION

The goal of this project is to fully computerize the current attendance system, making it simpler to compile attendance records. Some of the actions taken to address these issues include a student lateness policy that discourages students from showing up at the last minute to take attendance. With the offered solutions, the fingerprint attendance system can clearly not only avoid the detected problems, but to also promote extremely dependable ways of controlling the student attendance record. This project is well recommended primarily for lectures and laboratory sessions in Schools both colleges and universities and even in primary schools too. Business organizations could also use it to check for staff absenteeism and lateness.

This Mobile-based Fingerprint Attendance System can also be worked on by another; i.e. it can be enhanced or improved on; hence the followings are recommended:

i. Adding an LED for charging status of the hardware device during charging.
ii. A diode arrangement can be made so as to block the flow of current from the battery to the charger. This will prevent reverse charging of the battery. This diode arrangement will only permit unidirectional flow of current from the charger to charge the battery.

iii. The hardware device should display on the LCD screen "No Match Found!" when an unrolled fingerprint is placed on the fingerprint sensor (scanner).
iv. The Android Mobile Application can and should be enhanced and re-developed so as to give room for "external database" of student's registration records. The external database of students' registration can be exported or shared with other attendants (lecturers) to be used / uploaded on their mobile app thereby escaping the stress of registration of each student's details for the whole class.

REFERENCES

1. Marijana, K. (2004). Passport of the future: Biometrics against Identity Theft. M.Sc. thesis in Information security. Norwegian Information Security Laboratory (NISlab).
2. Somasundaram, V., Kannan, M. and Sriram, V. (2016). Mobile based Attendance Management System. Indian Journal of Science and Technology, 9(35): 1-4.
3. Kamal, WAN M. (2015), Development of Academic Attendance Management System Using Bluetooth Technology. Faculty of Electrical Engineering, UniversitiTeknologi Malaysia pp 1-66
4. Shoewu, O., O.M. Olaniyi, and A. Lawson. 2011. "Embedded Computer-Based Lecture Attendance Management System". African Journal of Computing & ICT. 4 (3): 27- 36.
5. Tabassam. N et. al. (2009). Development of Academic Attendance Monitoring System Using Fingerprints Identification (IJCSNS). International Journal of Computer Science and Network Security, 9(5), 164-168.